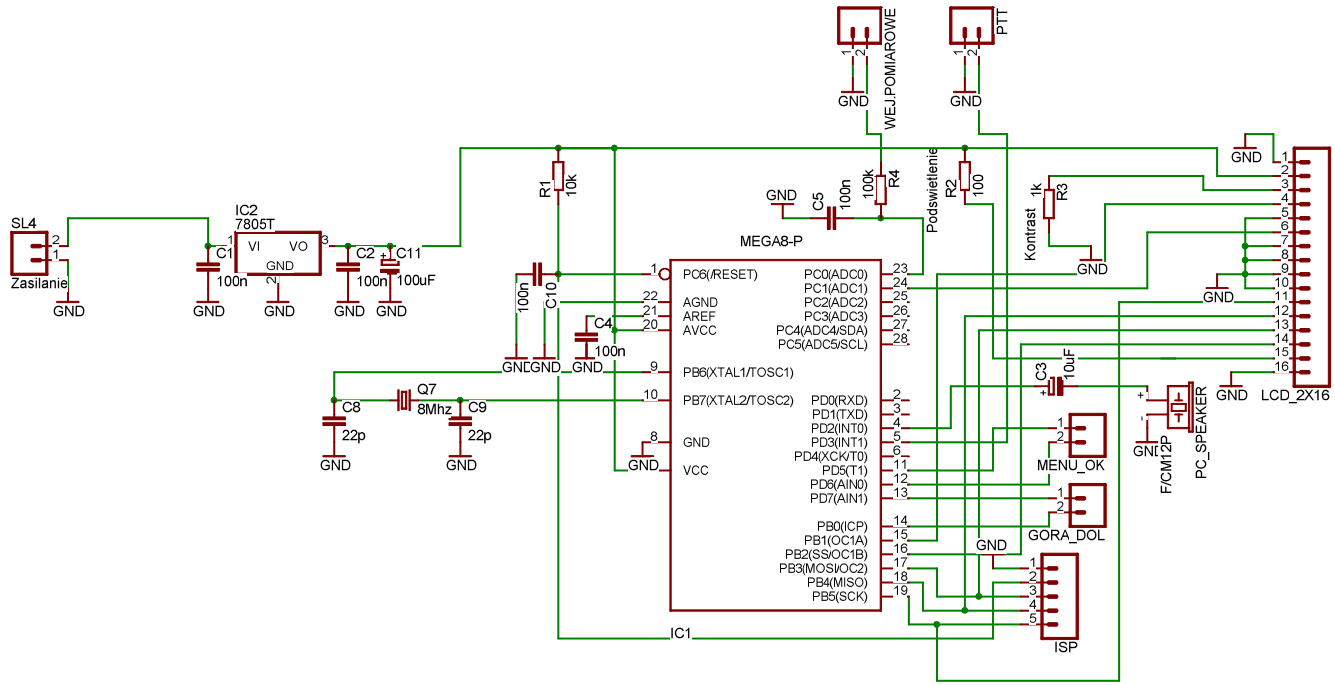

TITLE: yaesu897_ext_meter	
Document Number:	REV:
Date: 2008-10-26 21:41:28	Sheet: 1/1

2008-10-26 21:41:35 f=0.73 C:\Uzytki\Elektronika\Projekty\Miernik Yaesu897\yaesu897_ext_meter.sch (Sheet: 1/1)